Dura16 Battery Operating Manual

DURACELL®
ENERGY

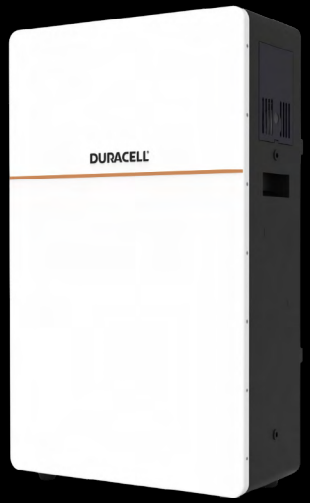

V0.6

DURACELL® ENERGY

Contents

1. Preface 3
1.1. Purpose 3
1.2. Statement 3
1.3. Overview 4
2. Safety Precautions 4
2.1. Safety Warning 4
2.2. Installation Location 5
2.3. Usage Precautions 5
2.4. Prohibited Actions 6
2.5. Symbol Conventions 7
3. Specifications & Functions 8
3.1. Appearance & Dimensions 8
3.2. Specification & Parameters 9
3.3. DC Cable Requirements 9
3.4. Exterior Features 10
3.5. Communication Interface & Definitions 11
3.6. Battery Communication 12
3.6.1. Battery Communication Connections 12
3.7. BMS (Battery Management System) 13
3.7.1. Main BMS Functions 13
3.7.1.1. Operational Control Functions 13
3.7.1.2. BMS Data Acquisition Functions 13
3.7.1.3. BMS Alarm & Protection Functions 13
3.7.1.4. BMS Fault Diagnosis Functions 13
3.7.1.5. BMS Operational Management Functions 13
3.8. Main Interface 14
4. Inverter Compatibility 15
4.1. Pairing the Dura16 with a Third-Party Inverter >6kW 15
5. Installation 17
5.1. Installation Flow Chart 17
5.2. Tool Preparation 17
5.3. Pre-installation Check 18
5.3.1. Box Contents 18
5.3.2. Unpacking Inspection 18
5.3.3. Mounting Bracket 19
5.4. Mounting Instructions 23
5.4.1. Cable Connections 24
5.4.2. Connection of Communication Cable 26
5.4.3. Grounding 26
5.5. Additional Notes on Parallel Connection 26
5.6. Post-installation Inspection 27
5.7. Power On/Off 28
5.7.1. Power On 28

5.7.1.1. For a Single Dura16 28
5.7.1.2. For Connecting Multiple Dura16s in Parallel 28
5.7.2. Cycle on Install 28
5.7.3. Power Off 29
5.7.3.1. For a Single Dura16 29
5.7.3.2. For Multiple Dura16s in Parallel 29
5.8. Sleep & Wake-up Function 29

6. Fault & Emergency Handling 30
6.1. Fault Handling 30
6.2. Emergency Handling 31
6.3. System Status Indicator 32

7. Add Duracell Energy to the 'Solis Cloud' 33
7.1. PV, Grid, Battery Monitoring & Maintenance System 33
7.2. Solis Cloud System 34
7.2.1. Setting up the Solis Cloud System 34
7.2.2. Add Duracell Energy as a guest through the plant creation interface 35

8. Customer Service Contact Information 36

9. Download the APP 36
8.1.1. Cable Connections 41

Please scan this QR code to find this document in alternative languages.

1. Preface

This document is published by Puredrive Energy Limited in Toddington, Gloucestershire, UK, hereafter referred to as Duracell Energy.

1.1. Purpose

This document introduces the residential low-voltage Dura16: PD-16kWh-50V-1G in terms of the product composition, installation, commissioning, system operation, maintenance, and troubleshooting. Ensure a thorough understanding of the product features, functions, and safety precautions provided in this document before installing and operating the energy storage system.

1.2. Statement

Before installing, operating, and/or maintaining the equipment, read this document and strictly follow all the safety instructions within and ony on the product.
The Danger, Warning, Caution, and Notice statements described in this document do not cover all the safety precautions. Duracell Energy shall not be liable for any consequences that may arise due to violations of safety requirements or safety standards concerning the usage of the equipment.
The equipment shall be used in the condition that meets the design specifications. Otherwise, the equipment may be faulty, malfunction, or become damaged, which is not covered under the warranty. Duracell Energy shall not be liable for any property loss, personal injury, or death caused thereby.
Comply with applicable laws, regulations, standards, and specifications during installation, operation, use, and maintenance. The safety precautions in the manual are only as supplementary to the local laws, regulations and standards.

Duracell Energy shall not be liable for any of the following circumstances:

1. Failure to follow operating instructions and safety warnings.
2. The equipment is operated beyond the conditions specified in this document.
3. Installation of the equipment by unqualified personnel.
4. Unauthorized disassembly, reassembly, modification of the product, or alteration of software code.
5. The equipment is installed or used in environments that do not comply with international, national, or regional standards.
6. Damage due to transportation not complying with the specified standards.
7. Damage due to storage conditions not complying with the specified requirements.
8. Equipment damage caused by force majeure (e.g., natural disasters, war, etc.).

1.3. Overview

This Dura16 (PD-16KWH-50V-1G) is primarily designed for residential use as an energy storage and conversion device. In areas with unstable power supply, it can serve as an emergency backup to ensure household electricity; in regions with high electricity prices, it can be paired with solar photovoltaics for self-consumption; in areas with significant peak-valley electricity price differences, it can be used for peak shaving and valley filling to reduce household electricity costs. The product integrates an industry-leading BMS (Battery Management System), enabling real-time and precise monitoring of battery health status (SOC/SOH) and key parameters. It is equipped with multiple active safety protection features to effectively prevent risks such as overcharging, over-discharging, short circuits, and overheating, ensuring safe and stable operation of the device. It is a reliable safeguard for household electricity.

2. Safety Precautions

2.1. Safety Warning

- **Connection Safety:** Ensure all power and communication cables are securely and correctly connected to prevent damage or fire hazards. Improper connections may lead to system failure.
- **Environmental Considerations:** Avoid installing the system in enclosed areas, direct sunlight, or close proximity to heaters to prevent fire or equipment damage. Additionally, keep the system away from areas with excessive oil, smoke, steam, moisture, or dust to minimize the risk of fire or electric shock.
- **Personal Protective Equipment:** Always wear insulating gloves and protective eyewear during installation to safeguard against electric shock or injury.
- **Water and Foreign Objects:** Prevent water and foreign objects from entering the module to avoid fire or electric shock. If infiltration occurs, immediately turn off the power supply.
- **Disassembly Prohibition:** Do not disassemble the unit as this increases the risk of fire or electric shock. There are no serviceable parts inside the unit. Unauthorised access will void the warranty.
- **Ventilation and Placement:** Ensure adequate ventilation for the system and avoid covering any ventilation openings. Install the system on a stable, level surface and refrain from placing it on unstable surfaces or covering vents.
- **Transportation Safety:** For transportation of the product in a vehicle, the product must remain in its original packaging. This must be secured to avoid damage. Utilize designated packaging materials and follow installation instructions carefully to prevent injuries during transportation.

- **Storage:** If storing the product prior to installation, this must be in an area that secured is to avoid damage, loss, deformity, damp or corrosion.
- **Accessory Installation:** Ensure proper installation of any additional equipment or accessories to prevent potential injuries.
- **Cable Management:** Organize and secure all cables appropriately to prevent tripping hazards or equipment failures.
- **Malfunction Response:** In the event of a malfunction, turn off the power supply immediately to prevent further issues.
- **Prohibited Use:** Do not stand on or place objects on the unit or use it as a stool or table.
- **Safe Disposal.** Dispose of the unit properly according to relevant regulations.
- **Liquid Leakage:** If liquid leaks from the module, take precautions to avoid skin or eye contact. Seek medical attention if necessary and contact customer services.

2.2. Installation Location

- **Keep Away from Heat and Fire:** DO NOT install the Dura16 near heat sources, open flames, or flammable materials.
- **Avoid Moisture and Water:** DO NOT install the Dura16 in damp locations, or near sources of water.
- **Well-Ventilated Space:** Ensure the installation location provides adequate ventilation to prevent heat buildup around the unit.
- **Good Access:** Ensure suitable access for future maintenance. Ensure there is adequate space to open the lid and access the terminals.
- **Observe Regulations:** Consider best practice recommendations (PAS 63100 REI 120) and perform a full risk assessment of the environment in which the product is to be installed.

2.3. Usage Precautions

- In case of any abnormalities such as unusual sounds, odors, smoke, water ingress, physical damage, or a drop, promptly turn off the system and contact customer service.
- Call customer services if the module experiences a significantly faster than normal discharge rate at room temperature, even when fully charged.
- Recommended ambient temperature for use: 10℃ ~ 45℃.

	NOTE	To maintain a long and healthy battery life please ensure that the Dura16 completes a FULL cycle (to 100%) at least once every three months. In the winter months we recommend this is repeated more frequently.
	NOTE	For optimal performance, extended battery life, and safety, we strongly recommend installing the Dura16 indoors, in a cool, dry, and well-ventilated location away from heat sources, open flames, water, and flammable materials.

2.4. Prohibited Actions

- Disassembling or modifying the product is strictly prohibited, as it may compromise internal protective functions and lead to abnormal operation, heat generation, gas emission, or fire and will void the warranty.
- Do not touch the output terminal except for installation purposes.
- Exposing the system to fire, heat, open flames, or submerging it in liquid is strictly forbidden.
- Avoid impacting, crushing, or dropping the product.
- This system is not intended to power life-saving equipment, and foreign objects must not be inserted into it.
- Do not connect devices exceeding the specified operating voltage and current range.
- It is prohibited to unplug the amphenol connectors from the power terminals on the battery while the power is on.

	WARNING	This product is not a medical device and shall not be used for life sustaining equipment.

2.5. Symbol Conventions

The symbols that may be found in this document or on the products are defined as follows:

Symbol	Description
DANGER	This indicates a hazard with a high level of risk which, if not avoided, will result in death or serious injury.
WARNING	This indicates a hazard with a medium level of risk which, if not avoided, could result in death or serious injury.
CAUTION	This indicates a hazard with a low level of risk which, if not avoided, could result in minor or moderate injury.
NOTICE	This indicates a potentially hazardous situation which, if not avoided, could result in equipment damage, data loss, performance deterioration, or unanticipated results. NOTICE is used to address information not related to personal injury.
NOTE	Supplements the important information in the main text. NOTE is used to address information not related to personal injury, equipment damage, and environment deterioration.
	Indicates a high-voltage danger zone, risk of electric shock.
	Indicates a high risk of fire
	Guide users to refer to the user manual.
CE	Indicates that the product complies with the essential qualifications of the EU New Approach to Technical Harmonization and Standardization directives.
	Indicates that the product is electronic waste, must be sent to specialized recycling facilities. It is prohibited to discard with household waste.
	Indicates that the product or packaging is made from renewable materials, reminding customers to recycle and dispose, and avoid improper disposal.

Figure 1.

3. Specifications & Functions

3.1. Appearance & Dimensions

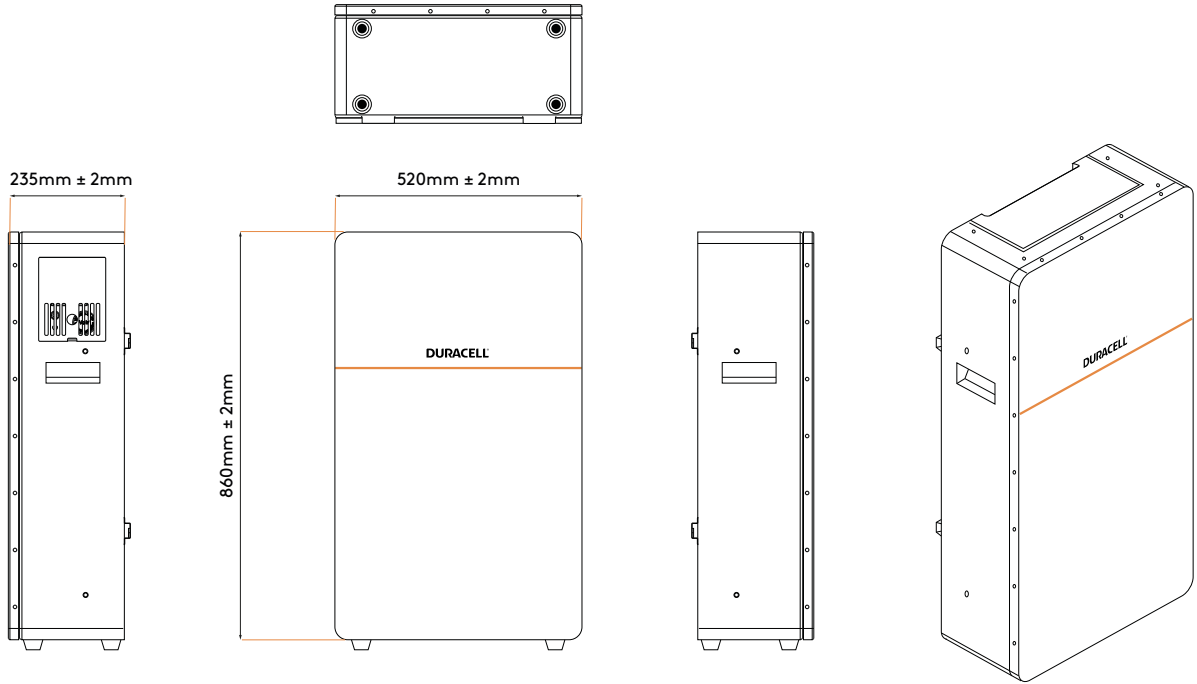

Figure 2. Appearance & dimensions

3.2. Specification & Parameters

Item		Specification
Configuration		1P16S
Rated capacity		314Ah
Rated voltage		51.2V
Rated energy		16kWh
Voltage range		43.2 V ~ 58.4V
Maximum charge current		130A
Maximum discharge current		130A
Recommended ambient temperature range for operation		10℃ ~ 45℃
Operating temperature	Charge	-10℃ ~ 60℃
	Discharge	-20℃ ~ 60℃
Operating humidity range		5~85% RH, no condensation
Storage temperature range	Within 1 month	-20℃ ~ 45℃
	Within 1 year	0℃ ~ 35℃
Storage humidity range		<60% RH, no condensation
Dimension H x W x T		(860±2) x (520±2) x (235±2) mm
Product weight		122kg
Enclosure Protection		IP65
Application altitude		≤ 3000m

Figure 3. Parameters of Dura16

3.3. DC Cable Requirements

CAUTION — DC Cable must be a multistranded wire.

DANGER — Turn off the system before making electrical connections.
Ensure all cables are in a safe electrical condition.

Material	Specification	Max. Voltage	Rated Current
Silicone wire	4AWG/25mm	1000V	130A

3.4. Exterior Features

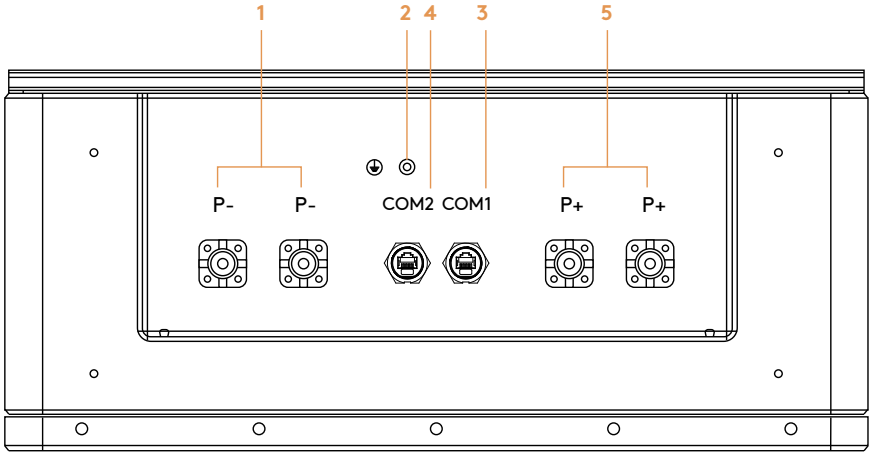

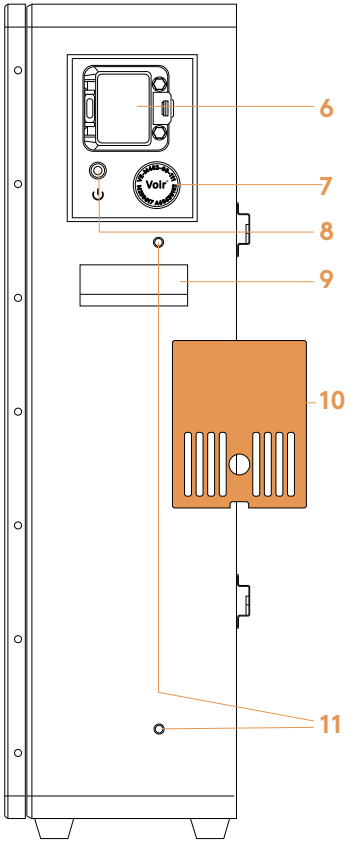

No.	Item	Description
1	P-	Battery negative for output or pack paralleling
2	Grounding	Grounding point
3	COM1 (inverter to battery)	Parallel COM input
		CAN COM
		RS485 COM
4	COM2	Parallel COM input
		Parallel COM output
		RS232 COM
5	P+	Battery positive for output or pack paralleling

No.	Description
6	Breaker
7	Pressure Relief Valve
8	Power on status indicator/button
9	Inset handle
10	Removable Magnetic Cover
11	Screwholes for exterior handles

Figure 4. Definition of external interface

3.5. Communication Interface & Definitions

Dura-i G3
Inverter

Dura16
Battery

Pin (Inverter)	Function Description
1	RS485_ A3 (for BMS)
2	RS485_B3 (for BMS)
3	GND_S
4	CAN_H
5	CAN_L
6	NC
7	CAN_L
8	CAN_H

Pin (Battery)	Function Description
1	RS485_B1
2	RS485_A1
3	GND_ISO
4	CANH
5	CANL
6	DI
7	RS485_A2
8	RS485_B2

Figure 5. Pin definition of terminal

3.6. Battery Communication

NOTE	The Dura 16 is currently only compatible other Dura 16 Batteries.
NOTE	The Dura 16 is compatible with all models and sizes of the Dura-i range, but also compatible with the single phase LV Solis S6 (max 6kW) under the generic battery selection 'Lithium'.

3.6.1. Battery Communication Connections

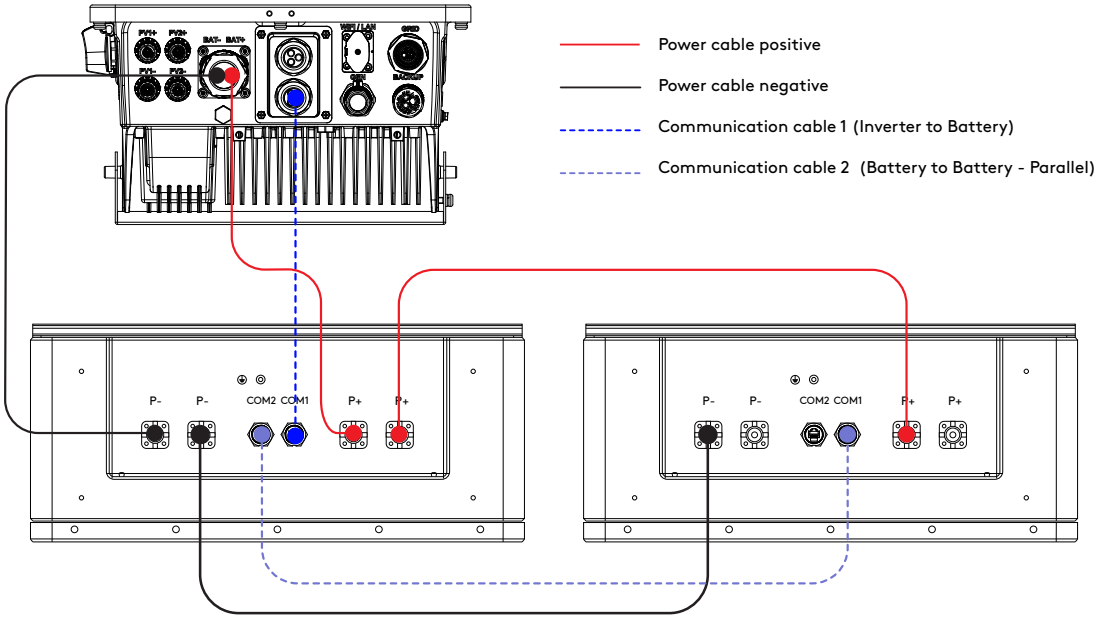

Figure 6.

	NOTE	Parallel battery connection must go from COM 2 to COM 1.
	NOTE	When connecting the inverter to Dura16, the communication cable must be plugged into the COM 1 terminal of the primary battery.

3.7. BMS (Battery Management System)

The Dura16 adopts a primary BMS (Battery Management System) capable of monitoring the voltage, current, and temperature within the Dura16, while also performing real-time precise calculations of SOC and SOH. When multiple Dura16s are connected in parallel, the BMS of the first Dura16 acts as the primary BMS (primary unit), aggregating information such as voltage and current from the secondary Dura16's and handling external communication.

3.7.1. Main BMS Functions

3.7.1.1. Operational Control Functions

Including start/stop control, charge/discharge control, operational parameter settings, and thermal management control.

3.7.1.2. BMS Data Acquisition Functions

The BMS should be able to measure electrical and thermal-related data in real time, including parameters such as individual cell voltage, battery module temperature, battery module voltage, series circuit current, and insulation resistance.

3.7.1.3. BMS Alarm & Protection Functions

The BMS provides electrical protection functions such as over-voltage protection, under-voltage protection, over-current protection, short-circuit protection, over-temperature protection, and low-temperature protection. It can issue alarm signals, implement local fault actions, and simultaneously report alarm information.

3.7.1.4. BMS Fault Diagnosis Functions

The BMS can monitor the operating status of the battery in real time, diagnose abnormal operating conditions of the battery and the BMS itself, and upload alarm signals to the local monitoring system and power conversion system.

3.7.1.5. BMS Operational Management Functions

The BMS enables effective management of charging and discharging, ensuring that overcharging and over-discharging do not occur during the process.

3.8. Main Interface

The BMS incorporates the electrical protection functions listed in the table below.
In accordance with its protection strategy, it issues alarm signals and initiates local fault isolation.

No.	Electrical Protection Functions	Isolation Response Time
1	Single Cell Over-Voltage Protection	1 second
2	Single Cell Under-Voltage Protection	1 second
3	Dura16 Over-Voltage Protection	1 second
4	Dura16 Under-Voltage Protection	1 second
5	Over-Current Protection	1 second
6	Short-Circuit Protection	500 microseconds
7	Over-Temperature Protection	3 seconds

Figure 7. Electrical protection functions

4. Inverter Compatibility

The Dura16 Battery is compatible with two brands of Single Phase inverter with a Battery LV DC output.

Inverter Manufacturer	Inverter Model	Inverter Size
Duracell Energy	Dura-i G1, G2 & G3	Up to 6kW
Solis	S6 RHI	Up to 6kW

4.1. Pairing the Dura16 with a Third-Party Inverter >6kW

When pairing multiple Dura16s with an inverter of a processing power higher than 6kW, **they must only be connected via a busbar.** This is due to the supplied DC battery power cables' current-carrying capacity maximum rating of 130A. See **Figure 8 on page 16.**

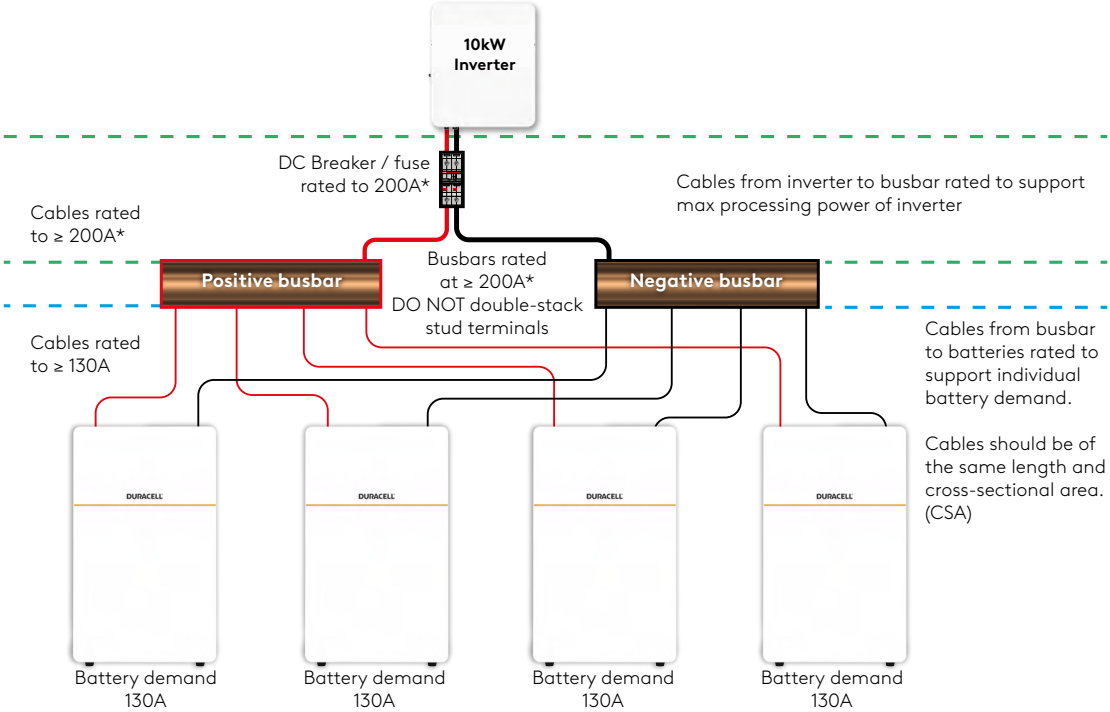

*Figure of 200A is an example based on inverter processing capabilities.
Consult inverter datasheet for exact charge/discharge properties.

Figure 8. *Multiple 16kW batteries and 10kW inverter solution - BusbarInstallation*

5. Installation

5.1. Installation Flow Chart

Figure 9. Installation Flow Chart

5.2. Tool Preparation

The main tools required for installing this product are as follows:

- Personal protective equipment, such as safety shoes, safety glasses, insulated gloves, etc.
- Screwdriver set
- Socket wrench kit or adjustable wrench
- Electric drill
- Basic electrical tools, including wire cutters, wire strippers, crimping pliers, etc.

Due to varying on-site conditions, installers and users should prepare any additional tools not listed here based on actual requirements.

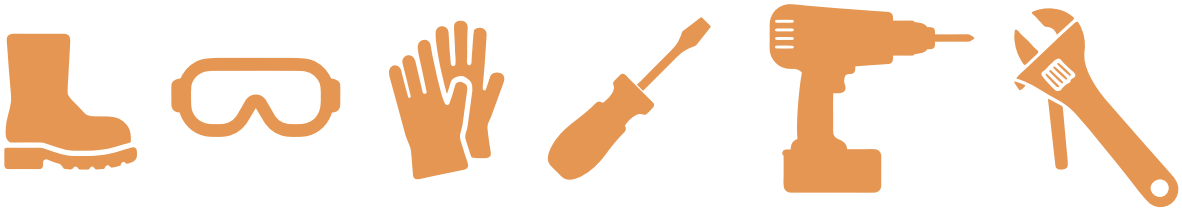

Figure 10.

5.3. Pre-installation Check

5.3.1. Box Contents

No.	Item	Quantity
1	PD-16kWh-50V-1G (Dura16)	1
2	Wall mount bracket	1
3	Screws & wall plugs	2 sets
4	Rubber feet	1 set
5	Cardboard mounting template	1
6	Amphenol port brackets (screwed to battery)	2
7	Positive power cable	1
8	Negative power cable	1
9	Battery-inverter communication cable	1
10	Battery-battery communication cable	1
11	Handles	4

Figure 11. Packing list (per Dura16)

	NOTE	Box contents are subject to change.
	NOTE	The rubber feet may come preattached to the Dura16. If not, please screw them on before moving the battery upright.

5.3.2. Unpacking Inspection

- Place the Dura16 on a clean, stable surface, ensuring the terminals do not come into contact with conductive materials.
- Check whether the quantity of each item in the packing list is consistent with the actual item.
- Confirm that all factory documents and accessories are complete.
- Examine the product's exterior to ensure there are no deformations, paint chips, loose bolts, or other abnormalities.
- Inspect the product's output interfaces; the positive and negative terminals, as well as low-voltage output ports, should be clean and free from dirt, liquid, or corrosion.

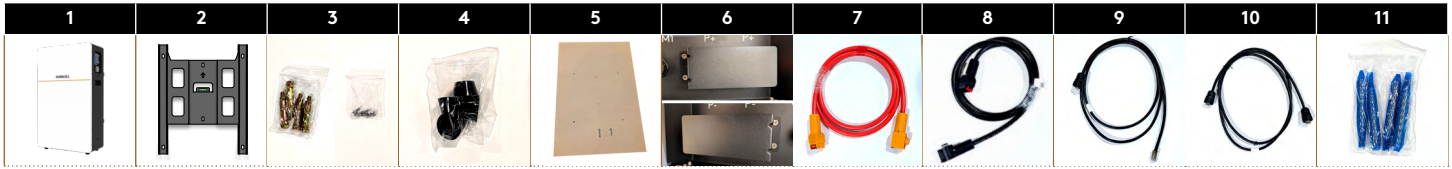

5.3.3. Mounting Bracket

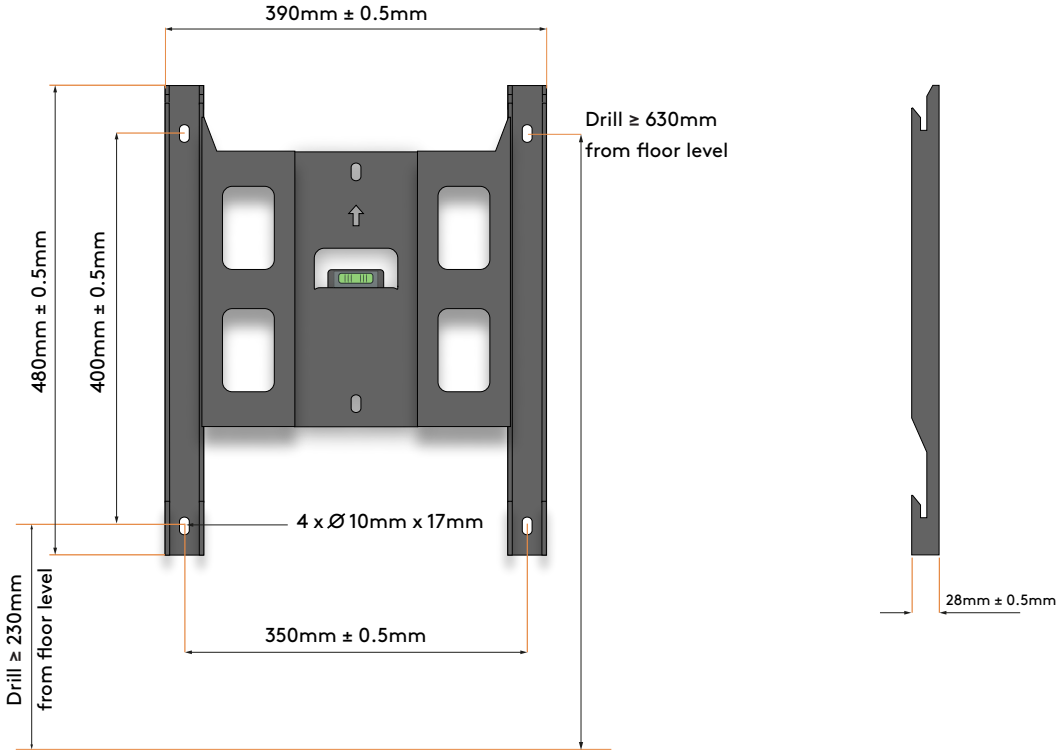

Figure 12. Illustration of wall-mounted bracket. Use the supplied cardboard template to mark its position on the wall.

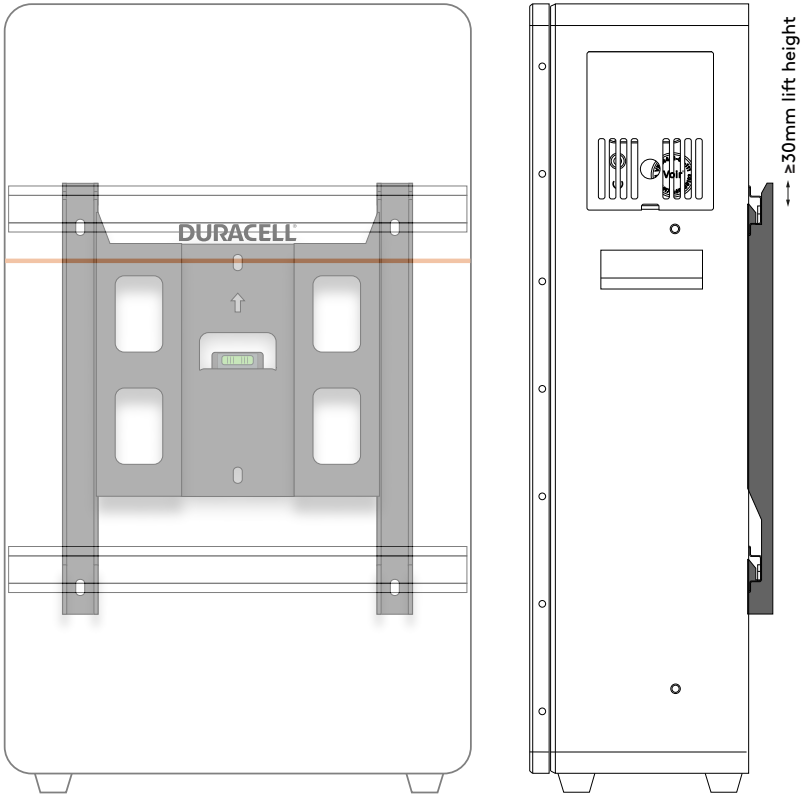

Figure 13.

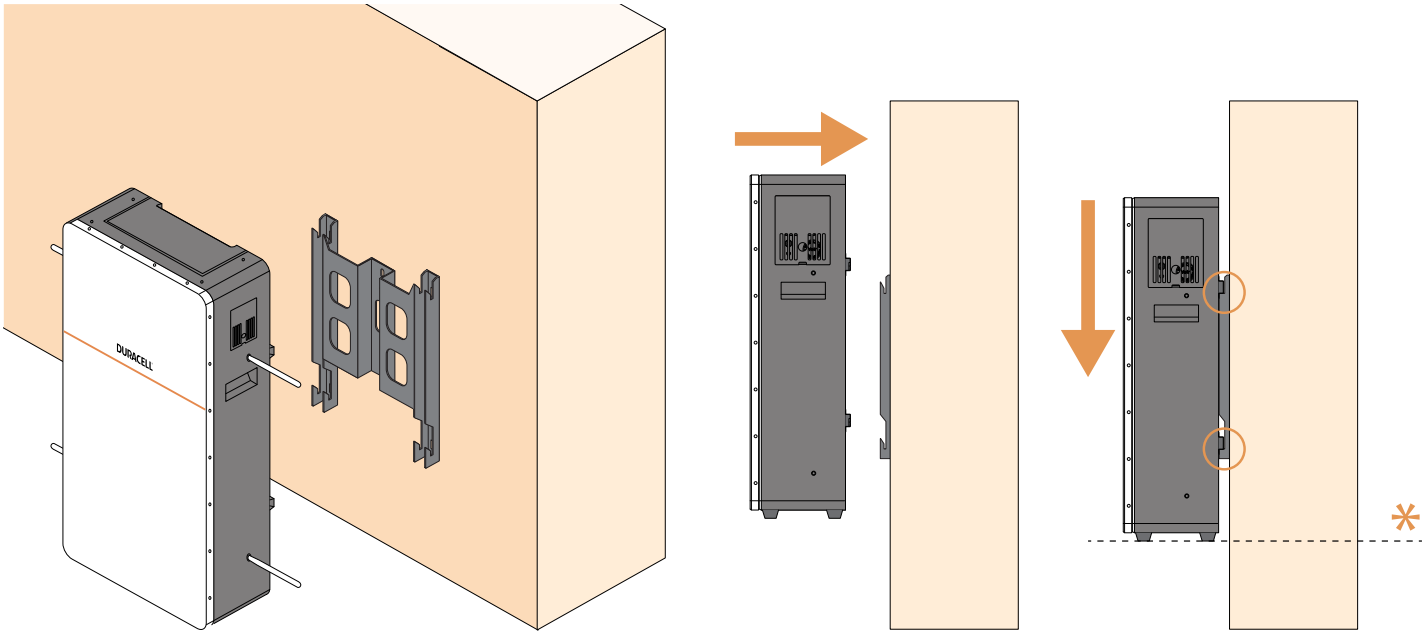

Figure 14. Installing the Dura16 on a wall. Use the detachable handles for extra safety.
If in an area not prone to flood or water pooling, it is suggested to set the wall bracket at a height that - when mounted - the battery's feet are seated securely on the floor. Refer to* **Figure 12 on page 19.

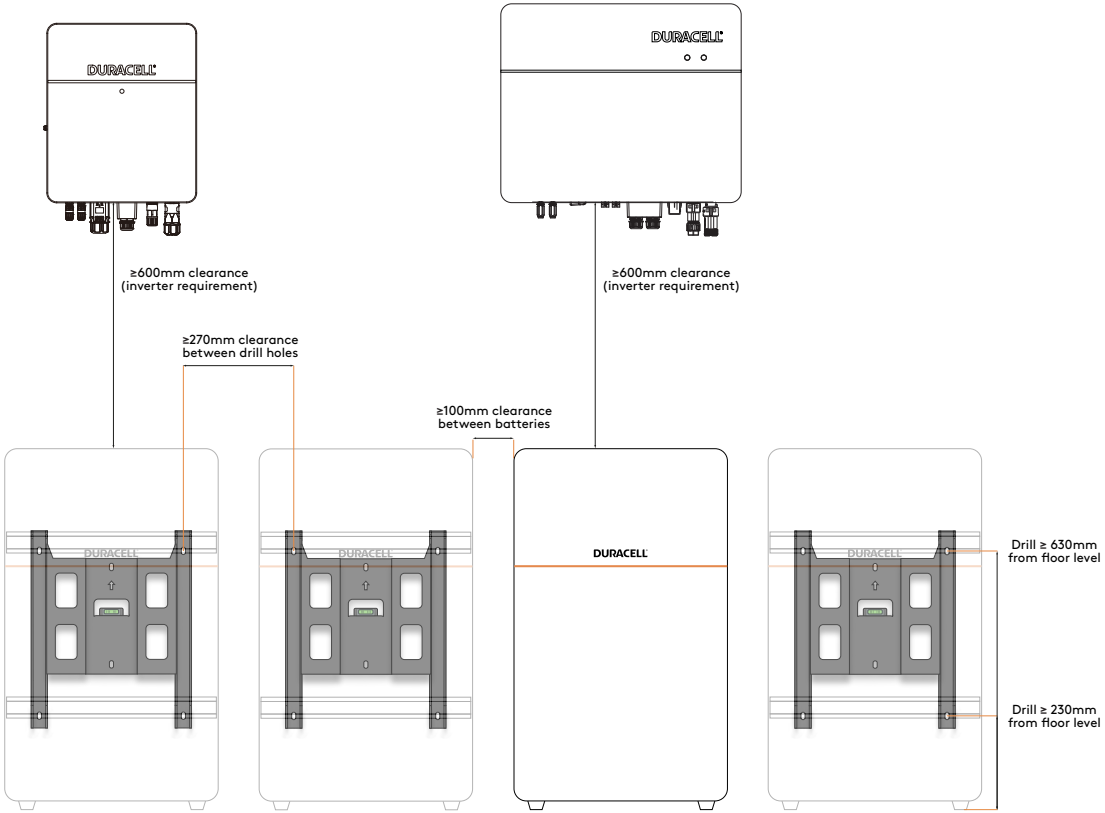
DURACELL
DURACELL
≥600mm clearance
(inverter requirement)
≥600mm clearance
(inverter requirement)
≥270mm clearance
between drill holes
≥100mm clearance
between batteries
DURACELL
DURACELL
DURACELL
DURACELL
Drill ≥ 630mm
from floor level
Drill ≥ 230mm
from floor level

Figure 15.

5.4. Mounting Instructions

Step 1. Select a sturdy wall to install the wall-mounted bracket.

Step 2. Use the supplied cardboard template to mark the mounting bracket's position on the wall.

Step 3. The dimensions of the wall-mounting bracket are shown in **Figure 12 on page 19****. Position the bracket against the wall in the indicated orientation, ensuring the bottom edge remains parallel to the floor.**

Step 4. The horizontal spacing between wall-mounted installation holes is 328mm, and the vertical spacing is 300mm.

Step 5. Use an impact drill to bore holes at the marked positions (hole diameter: 8mm, depth: 60mm).

Step 6. Install the wall-mounted bracket and secure it with expansion bolts, applying a torque of 12 N·m.

Step 7. Lift the bottom of the Dura16 parallel to the ground and hang it from the top of the wall-mounted bracket.

Step 8. Confirm the Dura16 is securely mounted.

⚠	CAUTION	It is recommended to use the supplied external handles when moving the Dura16.
⚠	CAUTION	HEAVY PRODUCT. Due to the weight of the battery (122kg unpackaged) please ensure a thorough risk assessment is conducted before lifting or moving it, and deciding on a mounting location.

5.4.1. Cable Connections

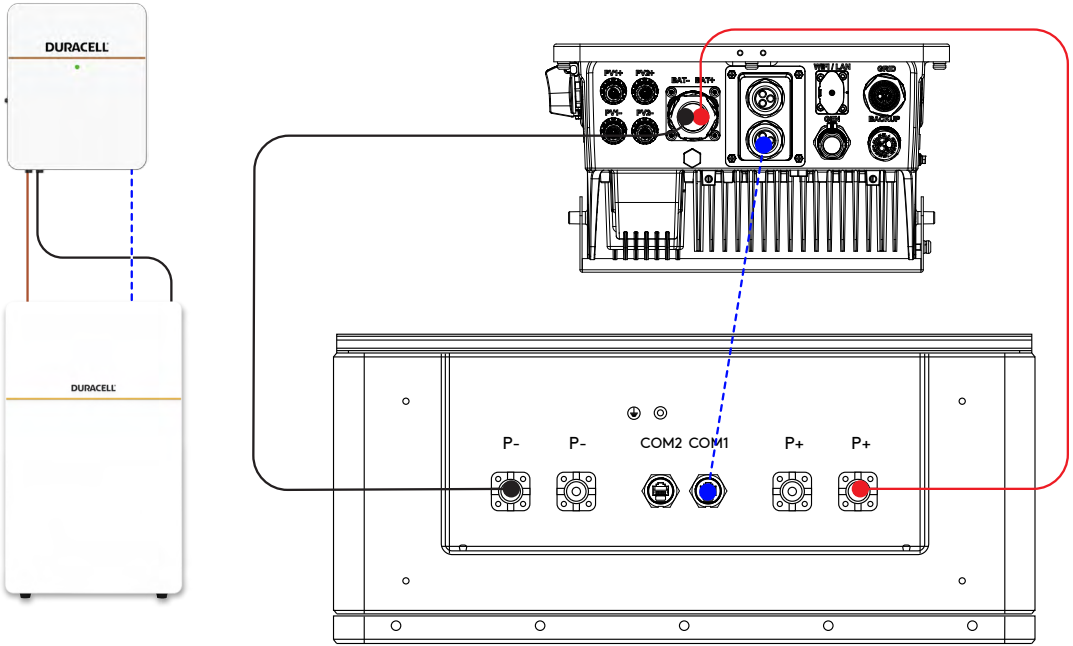

Power cable positive
Power cable negative
Communication cable

Figure 16. Single Unit connection of Dura16

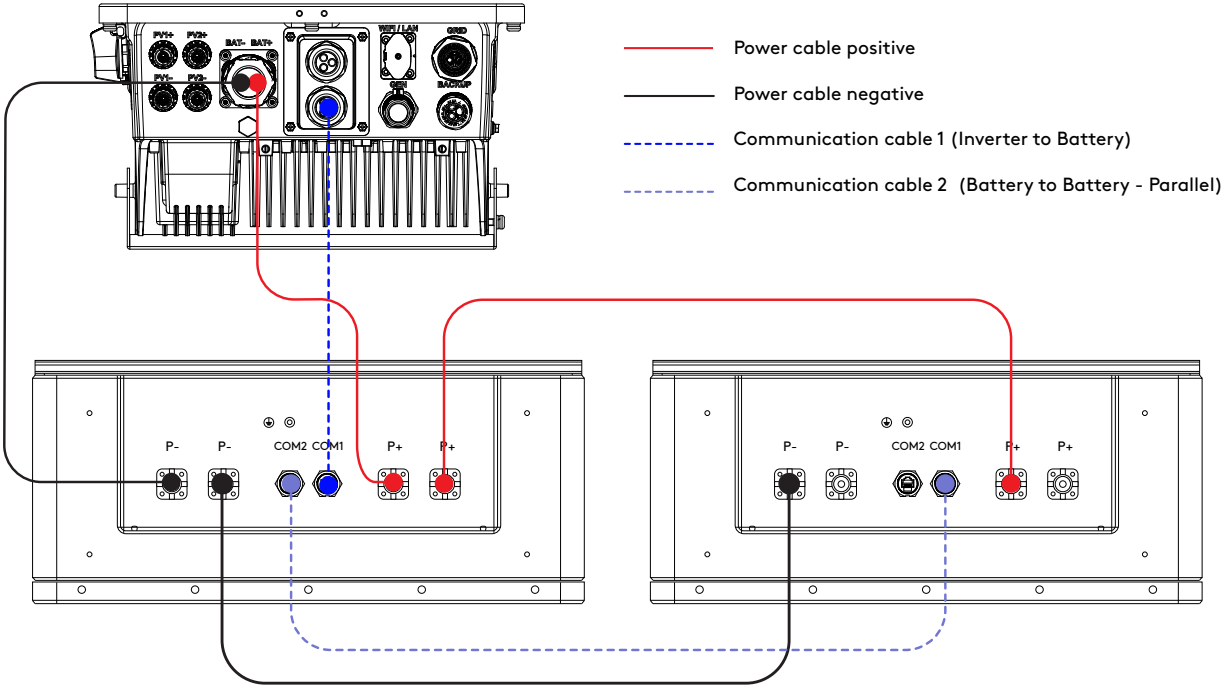

Figure 17. Connection of two or more Dura16's

Connect the negative power cable from the Dura16's negative terminal (-) to the inverter's P-port, and the positive power cable from the positive terminal (+) to the inverter's P+ port: Simply insert the quick-connect plugs at both ends of the power cables into the corresponding sockets. Ensure the connector colours match the corresponding socket colors to prevent mismatches or Reverse connections.

5.4.2. Connection of Communication Cable

For a single Dura16, either CAN or RS485 communication can be selected. Use a communication cable to connect from the inverter's communication port to the corresponding communication port on the Dura16.

5.4.3. Grounding

After assembly of the Dura16, grounding installation must be performed to ensure safety during use.

Step 1. **Secure the grounding wire using the M5*12 grounding screw with a torque of 3.5N·m.**

Step 2. **Connect the Dura16's grounding point to the grounding network using a wire.**

5.5. Additional Notes on Parallel Connection

Ensure Installation of Dura16 follows the methods described earlier.

1. When multiple Dura16s are connected in parallel, the distance between adjacent packs should be no less than 10 cm.
2. For parallel connection of multiple Dura16s, power and communication cables should be connected to the inverter as shown in the diagram above.
3. The maximum allowable charge/discharge current for the battery system in parallel configuration is 130A.
4. Communication cables should be connected from the inverter's communication port to the parallel input port of Dura16 1. The parallel output port of Dura16 1 should then be connected to the parallel input port of Dura16 2, and so on, with up to 15 Dura16s can be connected in parallel.
5. The parallel connection wiring method is as follows when the system maximum current is over 130A.

5.6. Post-installation Inspection

Item	Standards
Environment	Installation space should facilitate ventilation and heat dissipation, with a clean and tidy environment and appropriate temperature and humidity.
Appearance	The product appearance should be intact, without damage, rust, or paint peeling. All nameplates and labels should be clear and complete.
Installation	The equipment should be securely installed.
Connection	Power and communication cables should be correctly and reliably connected. The ground wire should be well connected to the grounding network, with the grounding point free of debris, damage, or corrosion.
Electric	ONOFF The circuit breaker status is ON, and the button switch is in the OFF state.
Insulation	DC500V B+B-5s1000Ω/V Before debugging, ensure: the system is powered off. Use the insulation meter set to DC500V range. Clamp the black negative probe of the insulation meter to the battery grounding bolt, and sequentially contact the red positive probe to the Dura16's positive terminal (B+) and negative terminal (B-). After each contact with the test point, press the insulation meter's test button to begin testing. Test for 5 seconds, with an insulation resistance value ≥1000Ω/V.

Figure 18.

5.7. Power On/Off

5.7.1. Power On

When powering on the Dura16, please follow the sequence below to prevent damage:

5.7.1.1. For a Single Dura16

After verifying correct wiring between the Dura16 and inverter, press the 'On' button.
The LED indicators will light up sequentially, indicating successful startup.

5.7.1.2. For Connecting Multiple Dura16s in Parallel

1. Connect all inter-battery parallel power cables and communication cables.
2. Connect the power and communication cables between the primary Dura16 and inverter.
3. Ensure all isolators are on, if present.
4. Proceed to turn on all Dura16 batteries within the array by the circuit breaker on the battery.
5. After all Circuit Breakers have been turned on, press the 'ON' button on all batteries starting with the Primary first then sequentially activate secondary 1, secondary 2, secondary 3, etc.
6. All Dura16 LEDs will illuminate sequentially, confirming system startup completion.

NOTE The system typically stabilizes output within 5 seconds after startup.

5.7.2. Cycle on Install

NOTICE For calibration purposes on installation, once the BESS is physically installed and commissioned, it is best practice for the Batteries to complete a full cycle. Ensure all Batteries charge up to 100% and are discharged down to 15% before normal operation commences.
This will need to be repeated if any additional storage or adjustment is required within the Battery set up, or after any fault which causes the battery to be out of service.
This will not only give optimal performance for the BESS by using its full capacity, but it is also a requirement for the product Warranty.

5.7.3. Power Off

When powering off the battery system, please follow the steps below to prevent damage to the Dura16:

5.7.3.1. For a Single Dura16

Switch off the circuit breaker on the front panel. After the panel LEDs turn off, disconnect the external input power and communication connections to complete the shutdown.

5.7.3.2. For Multiple Dura16s in Parallel

Sequentially switch off the primary pack, followed by secondary 1, secondary 2, secondary 3, and finally secondary N. The LED indicators on the Dura16s will then turn off sequentially.
Then disconnect the system's external input power and communication connections to complete the shutdown.

5.8. Sleep & Wake-up Function

Sleep Mode: The system enters low-power mode when any of the following conditions are met:

1. In idle state, 30-minute delay after single-cell or total over-discharge protection is triggered.
2. In idle state, single-cell voltage remains below 2200mV for 30 minutes.
3. Press and hold the power button for 3-6 seconds then release.
4. Forced shutdown via host software.

Before entering sleep mode, ensure no charger is connected (no external voltage below 45V), otherwise the system cannot enter low-power mode.

Wake-up: When the system is in low-power mode, it will exit and enter normal operation mode when any of the following conditions are met:

1. Press and release the power button within 1-3 seconds.
2. Connect an external charger with output voltage greater than 48V.

6. Fault & Emergency Handling

6.1. Fault Handling

No.	Fault Phenomenon	Fault Analysis	Solution
1	Communication Fault	RS485/CAN RS485/CAN communication failure	Check communication lines. Restart the Dura16 and Inverter. If the issue persists, power off the battery and contact customer services.
2	Single pack overcurrent	/	Check if the Dura16 output port is short-circuited. If no abnormality is found, power off and contact customer services for assistance.
3	Multiple packs parallel overcurrent	System output port short-circuit or Dura16 circuit breaker not closed	Check if the Dura16 output port is short-circuited. If the Dura16 circuit breaker is not closed, confirm whether it was tripped due to abnormal protection. If not abnormal, manually close the circuit breaker.
4	Protection Fault	Overvoltage protection	Inverter - Wait for protection to reset, or restart the Dura16 and Inverter. If the issue persists, power off the battery and contact customer services.
		Undervoltage protection	
		Short circuit, Reverse connection, or failure protection	
		Temperature abnormality (low/high temperature)	Power off and wait 2 hours for temperature to normalize, then restart. If the issue persists, power off the battery and contact customer services.
5	Protection Failure	System protection failure or other issues requiring emergency power cutoff	Power off the battery and contact customer services immediately.
6	Rapid current/temperature rise	Battery overcurrent, overcharging, or short circuit	Wear insulated gloves, disconnect all switches, and quickly remove all power cables. Contact customer services.
7	Smoke or fire	Battery short circuit	Wear insulated gloves, disconnect all switches. For minor smoke or fire, use a fire extinguisher. For major fires, follow emergency procedures.
8	Insulation Fault	System leakage	Stop use immediately and contact customer services.
9	Flashing LED during parallel use	Parallel connection failure	Restart the primary unit. If the issue persists, contact customer services.

Figure 19.

6.2. Emergency Handling

The Dura16 equips multiple layers of protection and offers high safety under normal operating conditions. However, in the event of accidents or failures caused by external factors, appropriate measures should be taken promptly while ensuring personal safety.

If The Dura16 is Dropped or Severely Impacted:

- Move the Dura16 to an open, safe area to avoid affecting nearby units. If significant odor, damage, smoke, or fire is observed, evacuate immediately and call emergency services. Professionals should use firefighting equipment to extinguish fires safely.

In Case of Fire:

- Evacuate the building or equipment area immediately. Call the fire brigade and notify relevant authorities.
- Provide necessary product information to firefighters and professionals, including but not limited to: Dura16 type, capacity, location, etc.
- Under no circumstances should anyone re-enter a burning building or equipment area.
- Isolate the area and prevent unauthorized personnel from approaching.
- If safe to do so, power down the Dura16 or system via the inverter or by disconnecting the main switch.
- After firefighters confirm the fire is extinguished, contact customer services.

6.3. System Status Indicator

Status		Run Status		
Sleep		Sleep	Off	Off
Standby		Normal	On	Off
		Alarm	Off	Flash 1
Run	Charge	Normal	On	Off
	Discharge	Normal	On	Off
Failure		Reverse-Connection Short Circuit	Off	On
		Cell Failure		
		NTC Failure		
		MOSFET Failure		
		Other Failure		
		If the correct power on procedure for connecting mutiple Dura16's in Section 5.7.1.2 on page 28 is not followed		
Warning/ Protection	Charge	Over-Voltage Alarm	Off	Flash 3
		Temperature Alarm		
		Over-Current Alarm		
		Other Alarms	On	Flash 3
		Over-Charge Protection	Off	On
		Over-Current Protection	Off	On
		Temperature Protection	Off	On
		Other Protections	Off	On
	Discharge	Low-Voltage Alarm	Off	Flash 3
		Low-Capacity Alarm		
		Temperature Alarm	Off	On
		Over-Current Alarm		
		Other Alarms	Off	On
		Over-Discharge Protection	Off	On
		Over-Current Protection	Off	On
		Discharge Pre-charge Failure Protection	Off	On
		Other Protections	Off	On

Figure 20. Descriptions of LED indicators

7. Add Duracell Energy to the 'Solis Cloud'

7.1. PV, Grid, Battery Monitoring & Maintenance System

Use the Solis manual to add the inverter to the Solis Cloud.

Ensure you have the Solis Data logger connected, via Wi-Fi or a hardline.

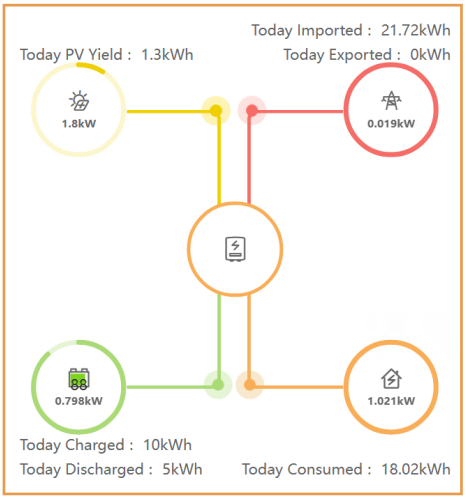

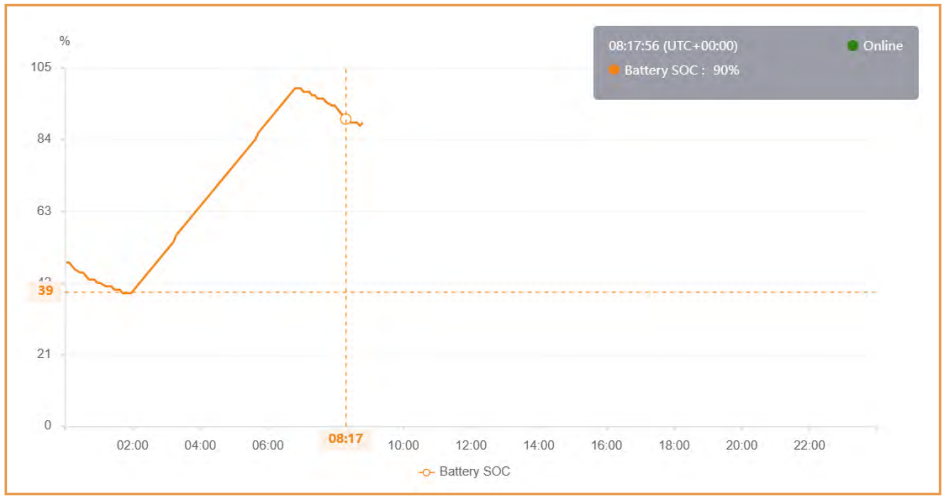

7.2. Solis Cloud System

Set up the Solis Cloud system, before adding Duracell to the Cloud.

7.2.1. Setting up the Solis Cloud System

- Refer to Solis Cloud Operation Manual - User
- Section 3.1. Register the account for the plant owner.
- Section 3.2. Log into the user account and verify email address.
- Section 3.4. Add Plant

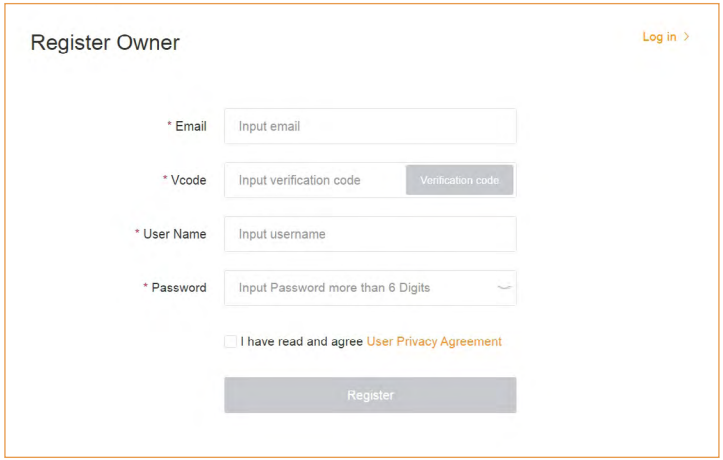

The 'add guest ' function is found at the top of the page when creating a plant. Select 'Add'

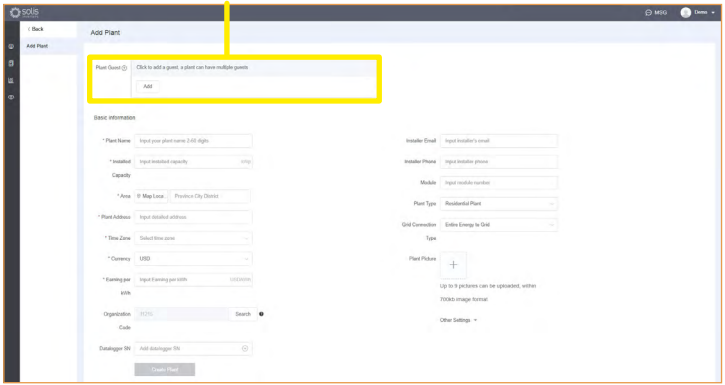

7.2.2. Add Duracell Energy as a guest through the plant creation interface

Add below email to 'input guest email'.

customerservices@duracellenergy.com

Add Guest:

1. Guest Authority: Guest have the authority to view plants but cannot edit any plant information.
2. Requirement: Add new guests which want to check the plant data and one plant may have multiple guests.
3. Steps:

(1) Click [New Guest] button in [Plant Guest] bar.

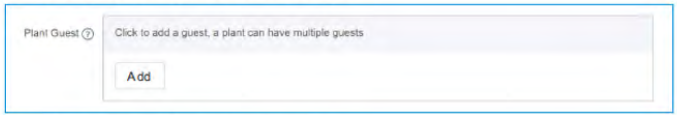

(2) Fill in the email of guests and click [Next].

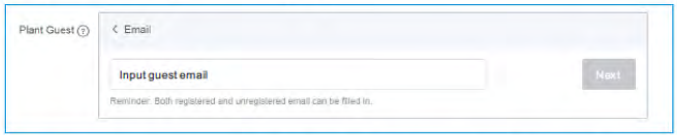

(3) It will display the username or email of the guest if the guest has been registered in SolisCloud, please click [Confirm Association] to complete.

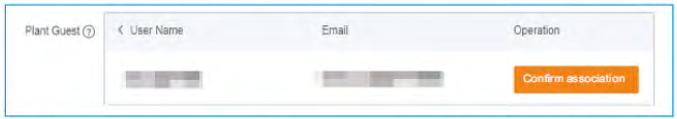

(4) If the guest has not been registered, the system will ask to input the username for the guest and click [Register and Associate] to finish. Then, the system will create the account for the guest and send account username and password to the guest's email address.

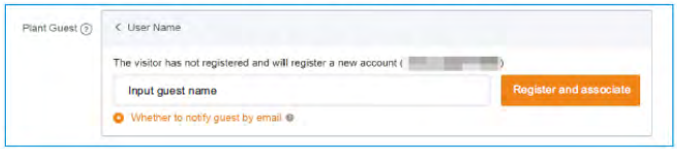

8. Customer Service Contact Information

If you are experiencing issues with your install which cannot be answered by the information in this guide you can contact customer services using the information listed below:

Tel: 0808 281 2855. Please refer to our website for current opening hours.
Email: support.uk@duracellenergy.com
Web Form: www.duracellenergy.com/contact-us/

9. Download the APP

Notes

Notes

DURACELL®
ENERGY

Get in touch...

support.uk@duracellenergy.com

01386 577845

www.duracellenergy.com

EU Authorised Representative address:

Comply Express Unipessoal Limitada,
StartUp Madeira,
EV141, Campus da Penteada,
9020 105 Funchal, Madeira,
Portugal

Duracell is a registered trademark of Duracell Batteries BV and Duracell U.S. Operations, Inc., used under license. All rights reserved.
Manufactured under license and warranty supported by Puredrive Energy Limited in Toddington, Gloucestershire, UK.
NOTE: NEITHER DURACELL U.S. OPERATIONS, INC. NOR ITS AFFILIATES ARE INVOLVED IN THE DESIGN, MANUFACTURE, MARKETING OR DISTRIBUTION OF THE PRODUCTS AND THEY DO NOT MAKE ANY (AND HEREBY DISCLAIM ALL) EXPRESS OR IMPLIED WARRANTIES RELATING TO THE PRODUCTS